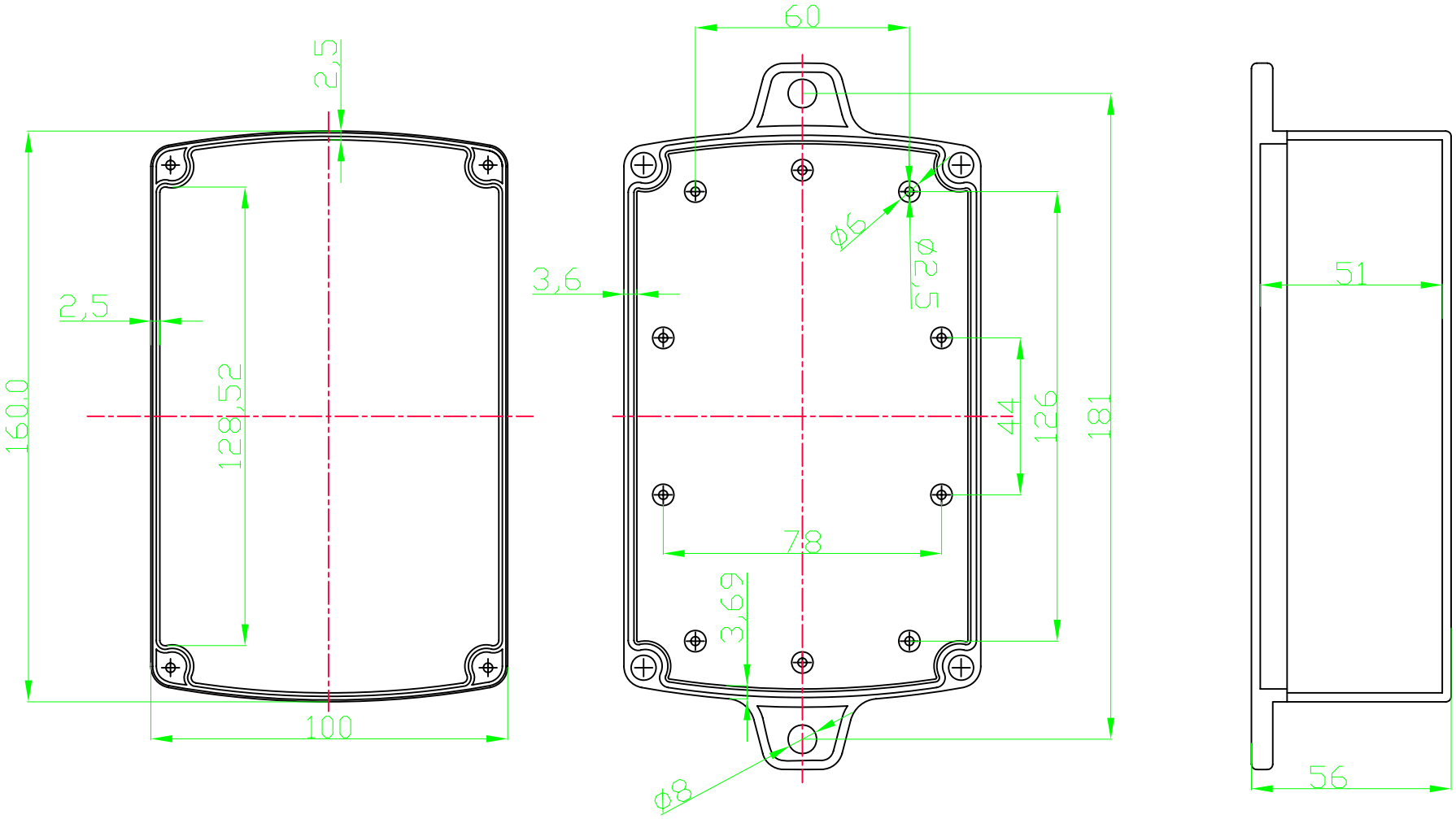

	CHKD

DETACHED LISTS

(mm)

TOLERANCES EXCEPT AS NOTED

MM	
.0 ± 0.2	±
.00 ± 0.1	±
.000 ± 0.05	±

ANGLES ± 5°

THIRD ANGLE PROJECTION

CHKD	zhongjoe	DATE	01/12/09'
MFD	li	DATE	01/16/09'
APPVL		DATE	

MATERIAL : ABS

QT'Y :

FINISH:

SCALE : 1:1

China-enclosure 赛诺模具壳体 **CHINA ENCLOSURE**
WWW.CHINA-ENCLOSURE.COM

TITLE

CN675

DRAWING NO.
/PART NO.

SIZE A4

REV REV REV2

DO NOT SCALE DRAWING

SHEET 1 OF 1

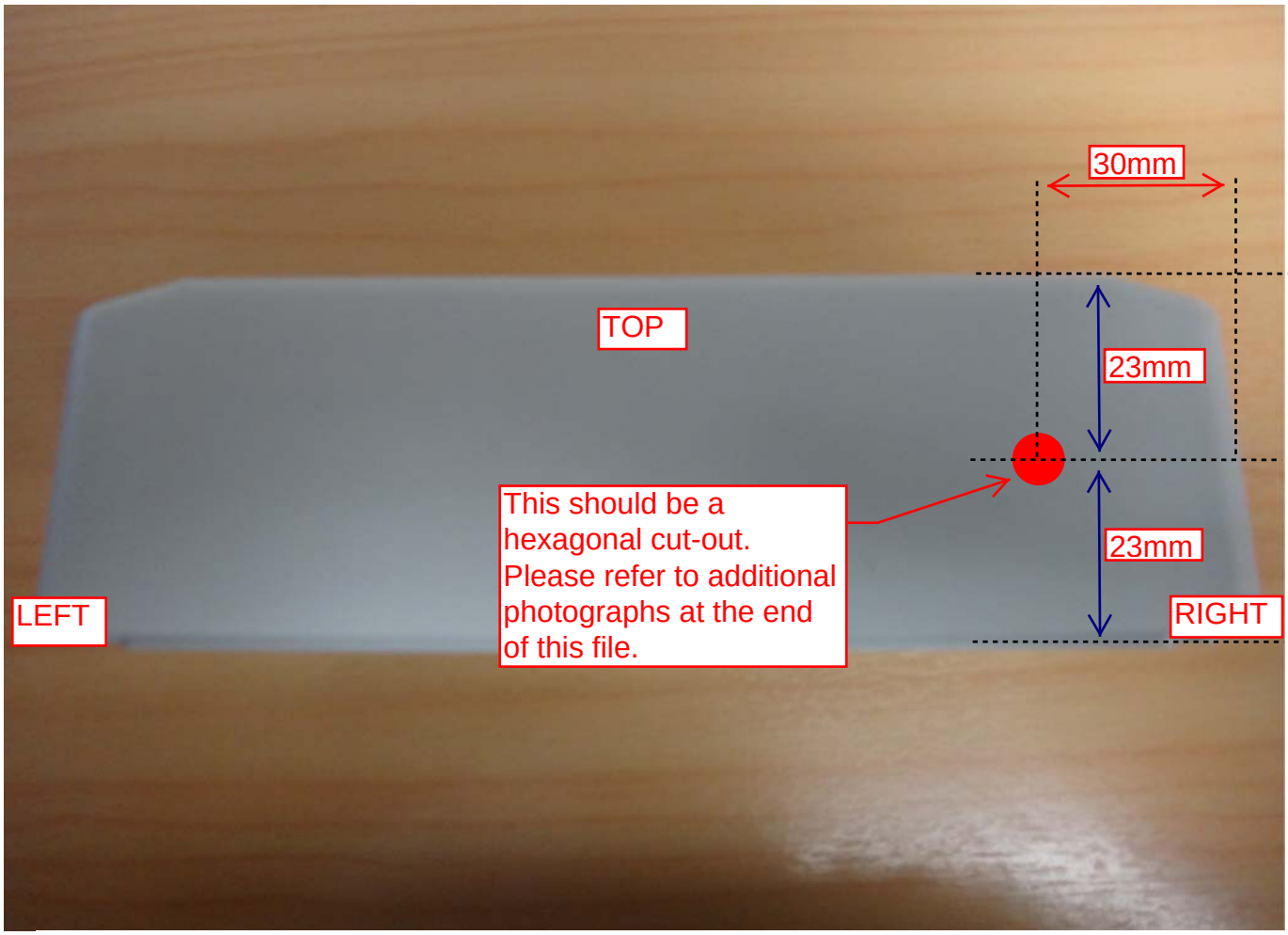
30mm
TOP
23mm
This should be a hexagonal cut-out. Please refer to additional photographs at the end of this file.
23mm
LEFT
RIGHT

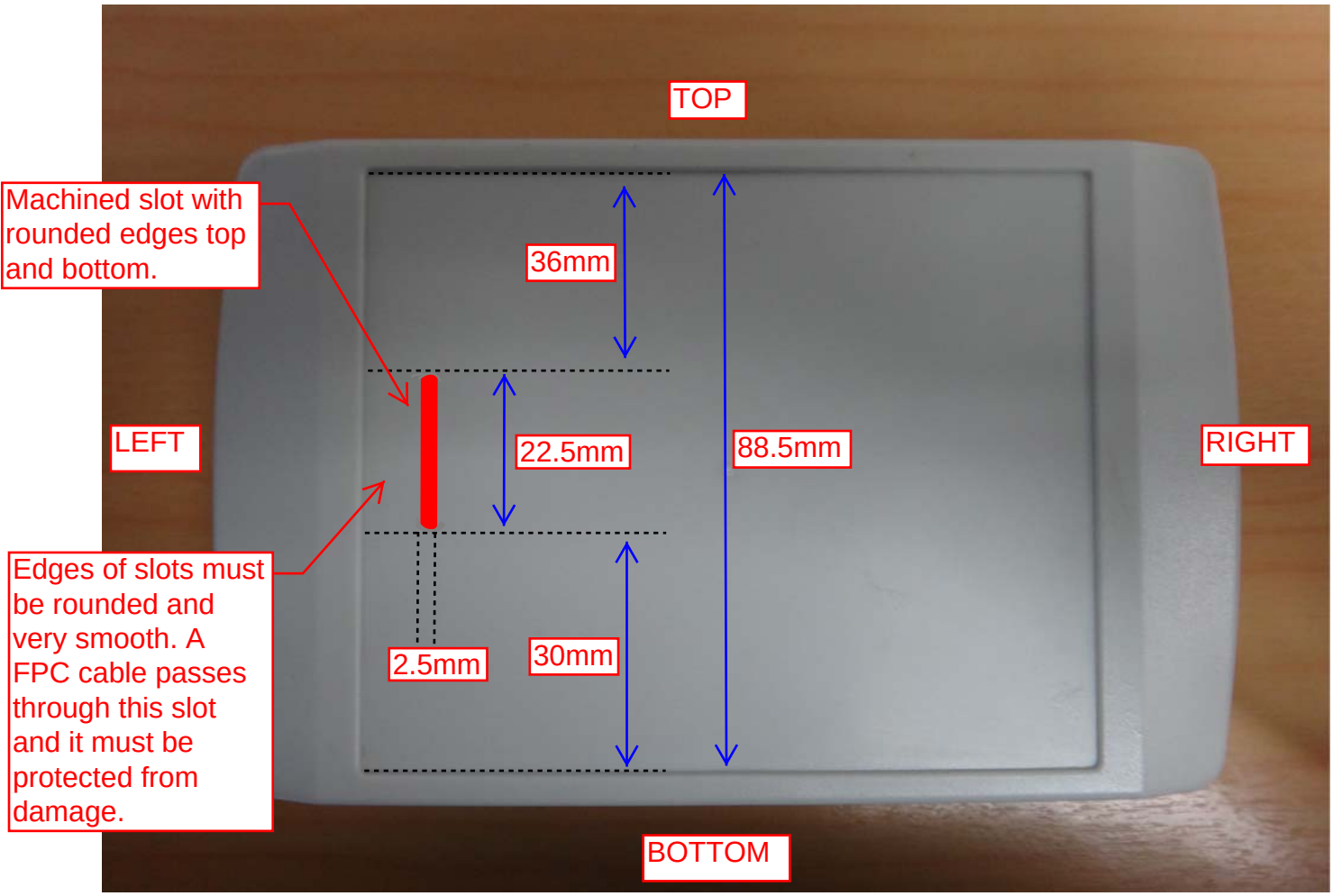
TOP
Machined slot with rounded edges top and bottom.
36mm
LEFT
22.5mm
88.5mm
RIGHT
Edges of slots must be rounded and very smooth. A FPC cable passes through this slot and it must be protected from damage.
2.5mm
30mm
BOTTOM

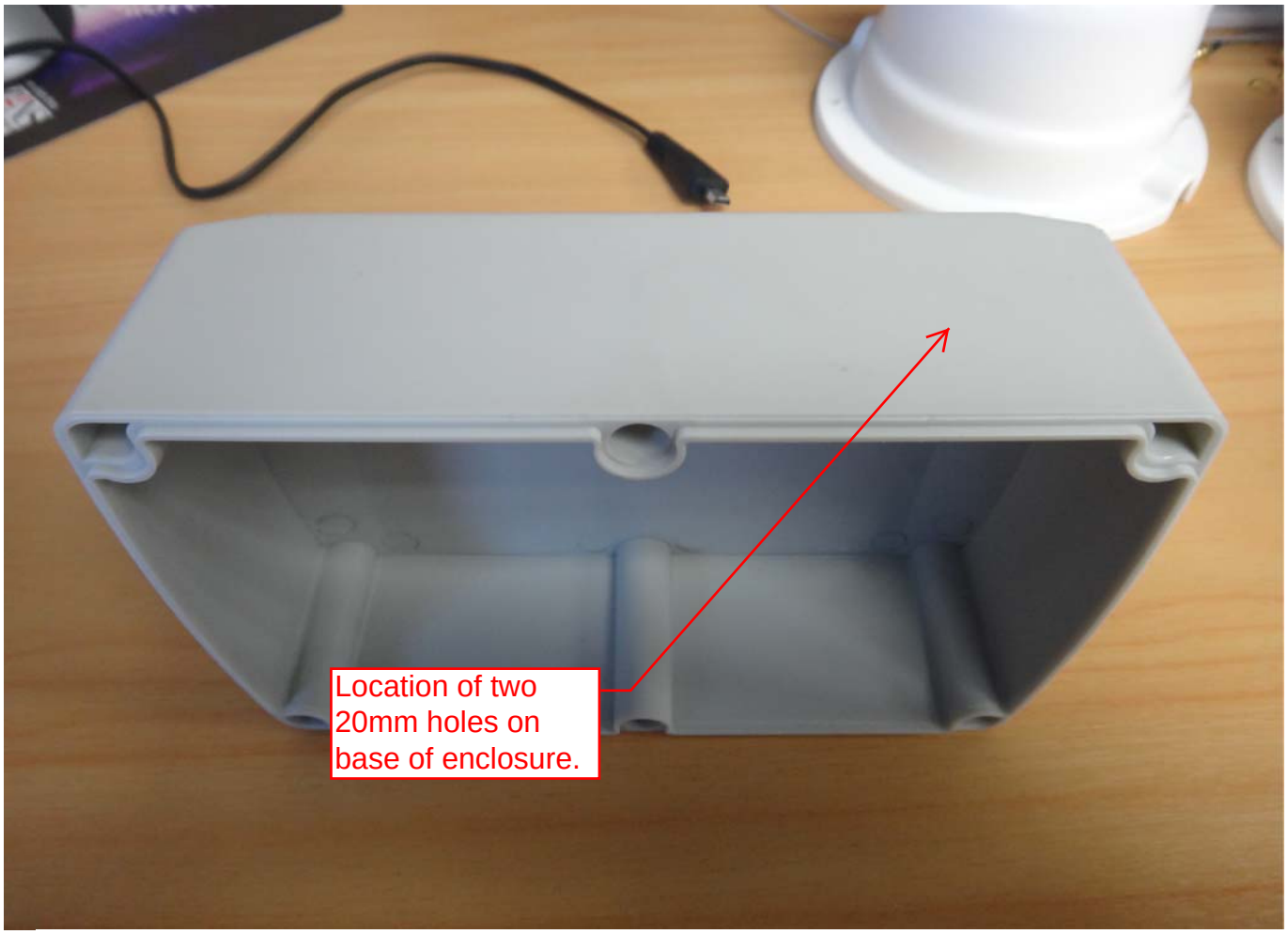
Location of two
20mm holes on
base of enclosure.

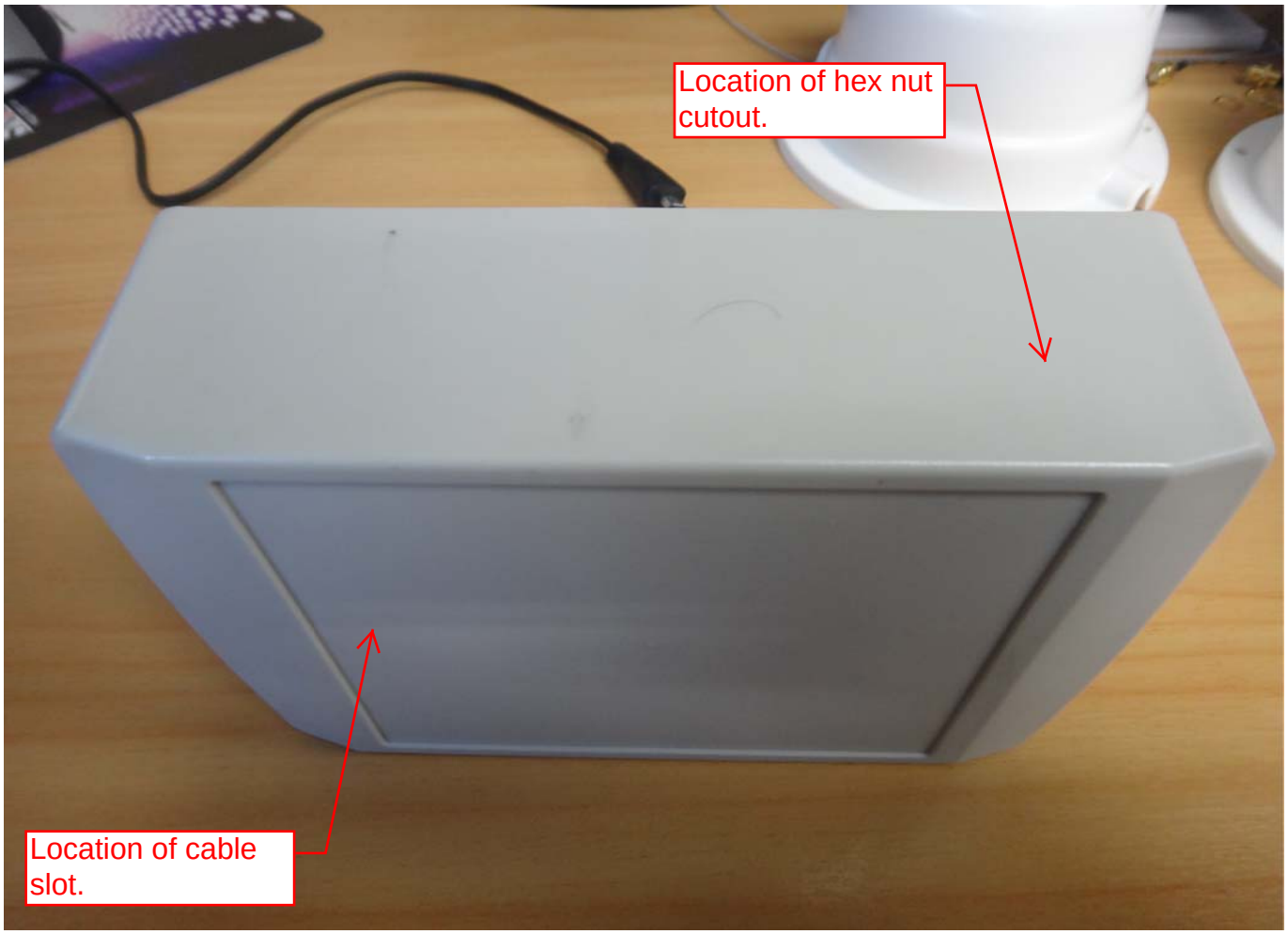
Location of hex nut
cutout.
Location of cable
slot.

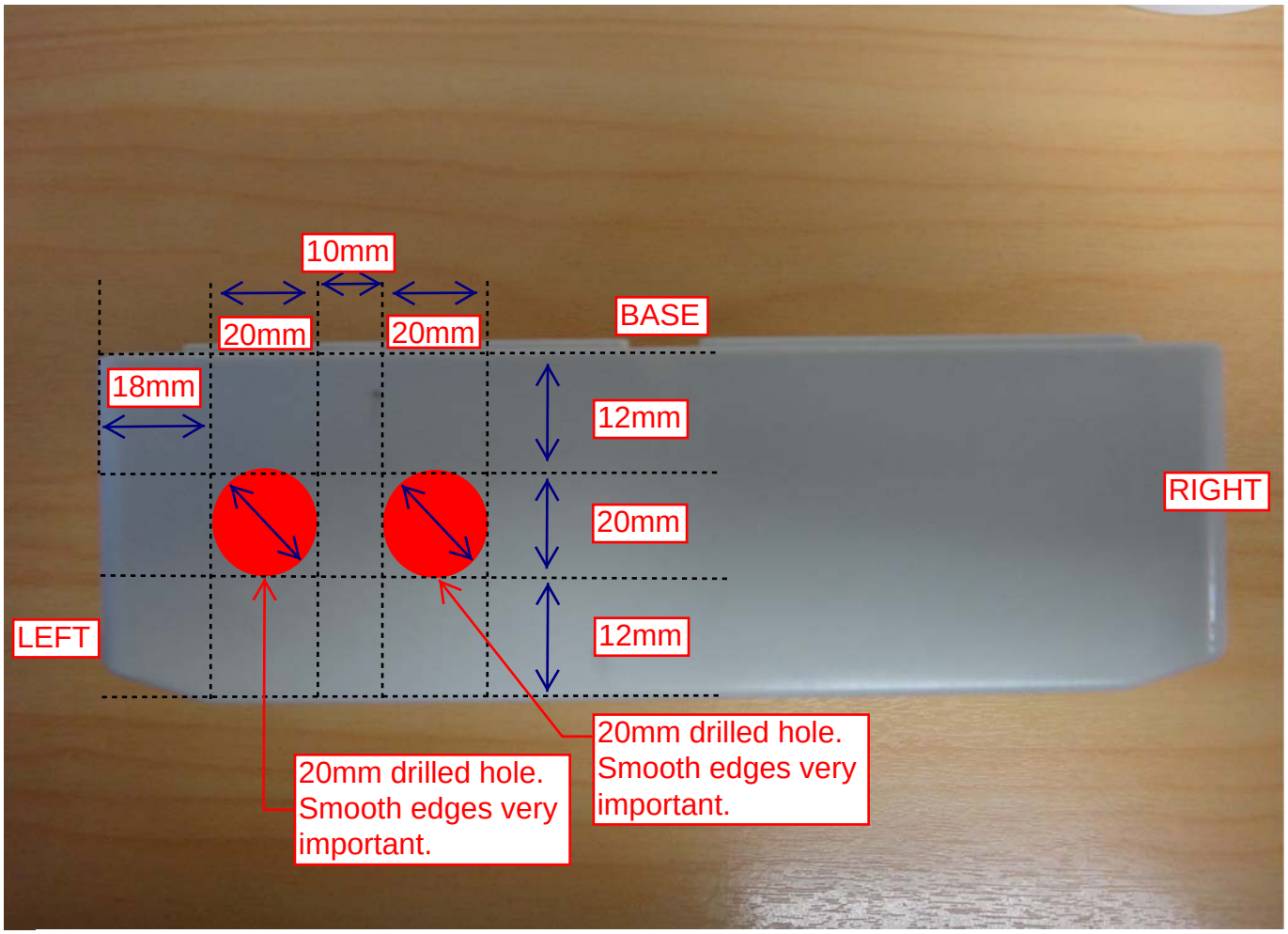
10mm
20mm
20mm
BASE
18mm
12mm
20mm
12mm
RIGHT
LEFT
20mm drilled hole.
Smooth edges very
important.
20mm drilled hole.
Smooth edges very
important.