22-PLB13/2

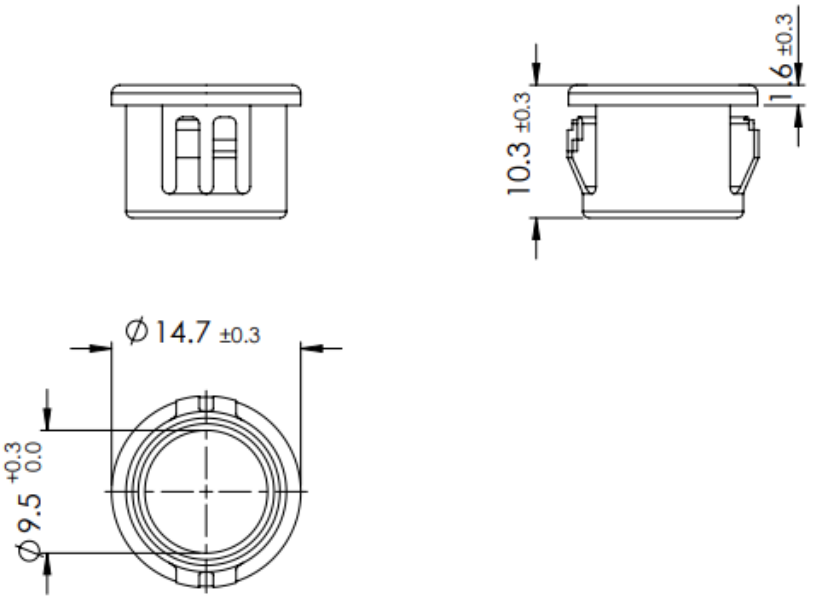

Mounting hole size: 12.7 mm

Max panel thickness: 3.1mm